Elektronik Sachse MHP GmbH & Co. KG

Installation Manual

Digital Ignition ZDG 3.10 12V (Royal Enfield Bullet 350/500)

Item: Z15-RE-3.10-12V

version: afffe98

Contents

1 Function 1

2 Scope of Delivery 2

3 Mounting 3

4 Electrical Connections 5

5 Initial Setup 8

6 Troubleshooting 10

1 Function

The digital ignition kit ZDG3 replaces original electronic ignition units as well as old points including the weights advancer or manual advance wires.

Function: Starting from TDC the momentary peripheral speed is calculated over 300° and by this means, the time up to ignition is calculated per crank turn. Because the peripheral speed varies substantially during acceleration, a rather long time frame for measurement was chosen in order to achieve a relatively exact measurement.

The computation of ignition timing is divided into three ranges, see table 1 on the next page.

The low range deliberately has no ignition advance to reduce kickback and also help electric starters and its gears. At this low engine speed the engine doesn't need advance. This is true for all selectable ignition curves.

Table 1 RPM ranges of the ignition box.

Range	Function
0 – 400 rpm	Starting range, ignition always at TDC to prevent engine kickback and ease starting
400 – 1000 rpm	Idling range, typically 2° to 8° advance, depending on the selected curve
1000 – 12,000 rpm	Partial load range – maximum load range, the main advance adjustment takes place here, depending on the curve selection

The mid range is somehow a “static advance”. Static because it’s used for the engine starting and low idle and more or less corresponds to the traditional *static advance* from a functional point of view, although it is set up entirely in software, in contrast to a mechanical static advance. The amount of static advance depends on the choice of ignition curve and is usually between 2° – 8°.

The last range is the actual operating range and the advance is set dynamically according to the selected ignition curve.

Wasted Spark

The ignition uses the so called *wasted spark* principle. That means that every crankshaft rotation a spark is generated. This is indeed a deliberate design decision and cannot be changed. It might sound inefficient at first, but actually doesn’t have much impact or drawbacks.

2 Scope of Delivery

Figure 1 shows what’s supposed to be in the package. Note that in some cases the image may not show the most up-to-date version. We also might add, change or remove components. If there are any discrepancies or questions, don’t hesitate to reach out to us.

Figure 1 Scope of delivery.

3 Mounting

- First remove the points and the weights advancer. Both are not needed any longer.
- If the ignition ships with a driver sleeve. Place the driver sleeve on the shaft and fix it either with set screws (if it's a version with set screws) or fix it from the top with a nut or screw.
- Then, the circuit board is mounted just like the old pickup plate and an insulation sleeve may be used to protect the cable. The cable is routed directly to the mounting location of the ignition box. Next the magnet disk is mounted. But do not tighten the set screws in the disk just yet.
- Make sure the magnets in the magnet disk align with the sensor.

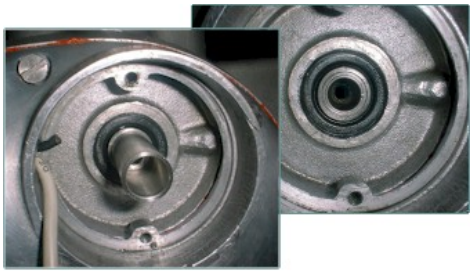

1

2

The original ignition coil can be used.

Except for coils from a 2-stroke engine and CDI types, nearly all types of new or used ignition coils can be used. The only technical requirement of the coil is a primary resistance of 2 Ω – 5 Ω. Note that there are a few coils out there with only one (+) connector, the negative one is connected to ground. Those coils are not suitable with this ignition because it's not possible to route the – connection to the ignition box.

To measure the primary resistance, disconnect the contacts of the coil and measure the resistance between the plus and minus contacts with a multimeter.

4 Electrical Connections

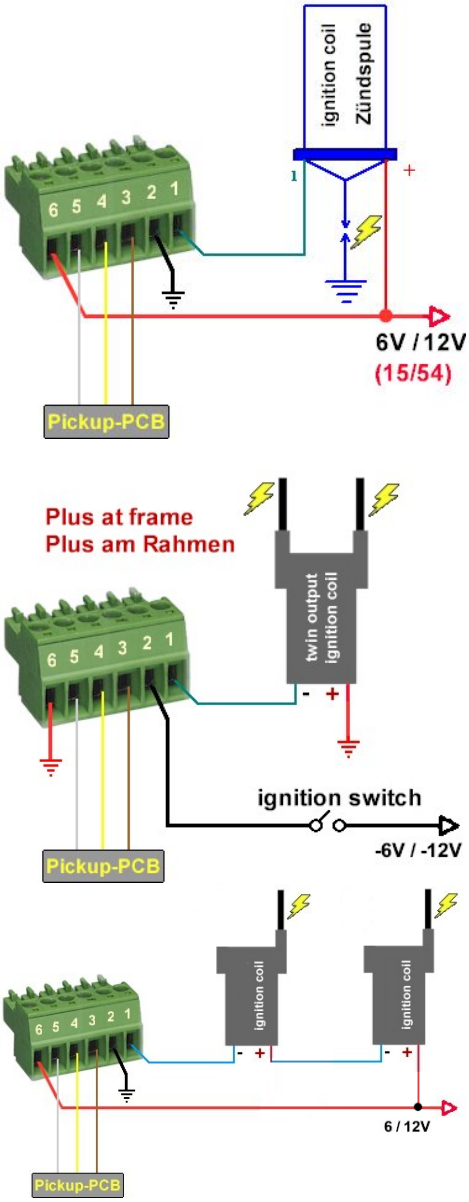

Negative ground – Minus connected to frame, two 6 V coils connected in series.

Negative ground:

Table 2 on the next page details how the ignition box is wired up.

Table 2 Terminal connections on the ignition box.

Connector	Function
1	Ignition coil –
2	Ground
3	Pickup lead, brown
4	Pickup lead, yellow
5	Pickup lead, white
6	+12 V supply voltage, switched

The wire cross section of the ground cable should not be below 1 mm^2 and should be kept as short as possible. The wire cross-section of the other cables should not be below 0.5 mm^2.

Crimping the Ferrules

Use insulated wire end ferrules on the cables. The wire end ferrules might be too small to hold the wires. If that's the case trim off a few strands of the wire so the wire fits into the ferrules.

For crimping the wire end ferrules it's best to use professional crimping pliers designed for this purpose. However, it can also be done with a pipe wrench. If uncertainty exists about the quality of the crimp it's possible to solder the ferrules, but that should be avoided if possible. How crimping is done is detailed in figure 2 on page 7.

Use only one ferrule per wire. Do not add a second larger ferrule on top of a smaller one. This in turn means, the pickup wires don't need additional ferrules because they are already equipped with a set of ferrules.

Attention: Please do not shorten the pickup lead. Coil up excess wire and fix it with cable ties.

Spark Plugs / Spark Plug Caps

Make sure you use a resistive component in the chain. This usually is done by using interference-free caps for the spark plugs. A resistive component is only needed at *one* point in the ignition system. This can be either a shielded spark plug, a shielded spark plug cap, a shielded HT lead or a separate resistor that goes in between the HT lead (atypical). Using the wrong plug caps may result in an unreliable ignition as they interfere with the electronics. Recommended are NGK caps with 5 kΩ internal resistance.

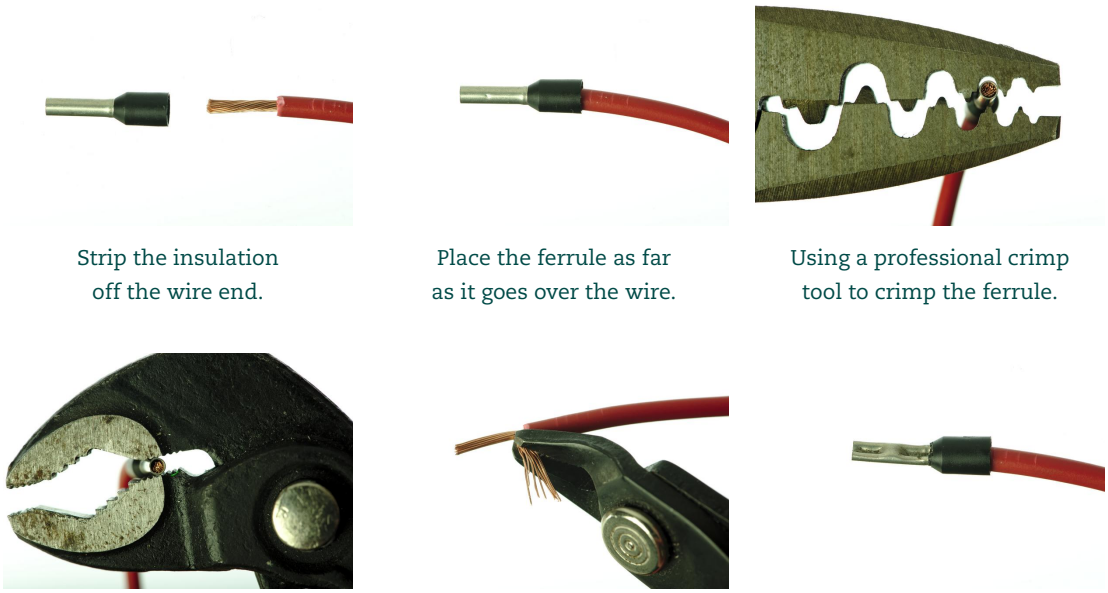

Strip the insulation off the wire end.

Place the ferrule as far as it goes over the wire.

Using a professional crimp tool to crimp the ferrule.

Using a pipe wrench to crimp the ferrule.

In case the wire doesn't fit into the ferrule, strip off a few strands.

The finished crimp should look like this and not come off when pulled firmly.

Figure 2 Crimping the wire end ferrules.

Any spark plug can be used with our ignition systems. No special requirements there. Just note that if a resistive spark plug is used, a resistive plug cap is not required.

Minimum Voltage

The ignition requires a minimum voltage of 5.9 V to operate. The supply voltage must not fall below this value at any time. This value cannot be measured with a standard multimeter. It will read much higher values if the ignition already starts to cut out because of under-voltage. The load of the bike electrics, especially the ignition coil(s) cause short voltage dips that are hard to measure with a multimeter. An oscilloscope or similar equipment is required to perform proper under-voltage analysis.

That having said, it should be noted that the ignition performs well under low voltage conditions. And often if the engine cuts out, it's in fact the coil not producing a spark any longer rather than the ignition stopping to work.

5 Initial Setup

- Bring the piston into TDC position.
- Turn the S-marked Magnet close to the sensor.
- Take care that the magnets in the disk are approximately in the same height as the sensor, see figure 3.

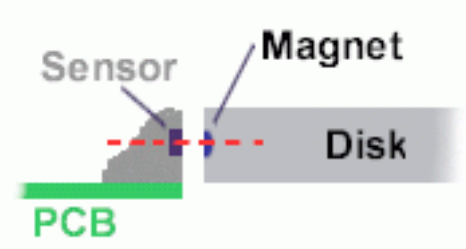

Figure 3 Ensure correct alignment of magnet disk and sensor.

- Turn on the ignition switch.
- Go on turning the disk. The LED near the sensor should light up at the S-marking. (It is possible that the LEDs already indicating at power on.)
- Slowly turn the disk to the N-marking until the LED is switching off. The disk is in the correct position and can be tightened by the set screws.
- Notice: you can't switch the LED on only by turning back. Therefore the disk must be turned back to the S marked magnet.

1

If the magnet disk happens to have *two* pairs of N and S magnets, it doesn't matter which pair is used for the initial setup. It is also not relevant which TDC (compression stroke or exhaust stroke) is used for the initial setup.

Finally secure the set screws with medium strength thread lock compound. This is best done after the initial setup is finished and accurate. Then remove only one of the set screws, so the position of the magnet disk doesn't change. Apply a small amount of thread lock compound and re-tighten the set screw. Repeat with the other set screw(s).

The advance curve selection switches shown in the image, is currently in test mode selection. The ignition curves can be set using the two DIP switches at the side of the box. Curve No. 0 is a test mode (also see section "Test Mode" on the next page) in which the box continually fires without the engine running. This tests the installation of the unit and coils. But it doesn't test the pickup. The other three switch positions select the ignition curve.

Figure 4 DIP switches and advance curve selection.

DIP switch flipped *down* means OFF, DIP switch flipped *up* means ON.

DIP 1	DIP 2	
OFF	OFF	Test mode
ON	OFF	Curve number 1
OFF	ON	Curve number 2
ON	ON	Curve number 3

Which Ignition Curve to Choose

The choice of curve depends on the complete system, engine, carburettor, exhaust, engine tuning, mono or dual plugged heads, etc. Furthermore, it depends on your personal preferences. Different curves might be applicable on the same bike for different driving characteristics, e.g. racing or touring.

Dual plugged heads require less advance. Apart from that it's not that easy to find the optimal curve. Different curves change the characteristics, so it's not easy to pinpoint a curve being "better" than another one, rather than "different". A dynamometer surely helps finding a good curve for the bike and use case. Just trying different curves on the road works as well. Notice that some curves only have subtle differences and you might not actually notice a change. If the engine starts to knock, reduce the advance. It's a clear sign of too much ignition advance.

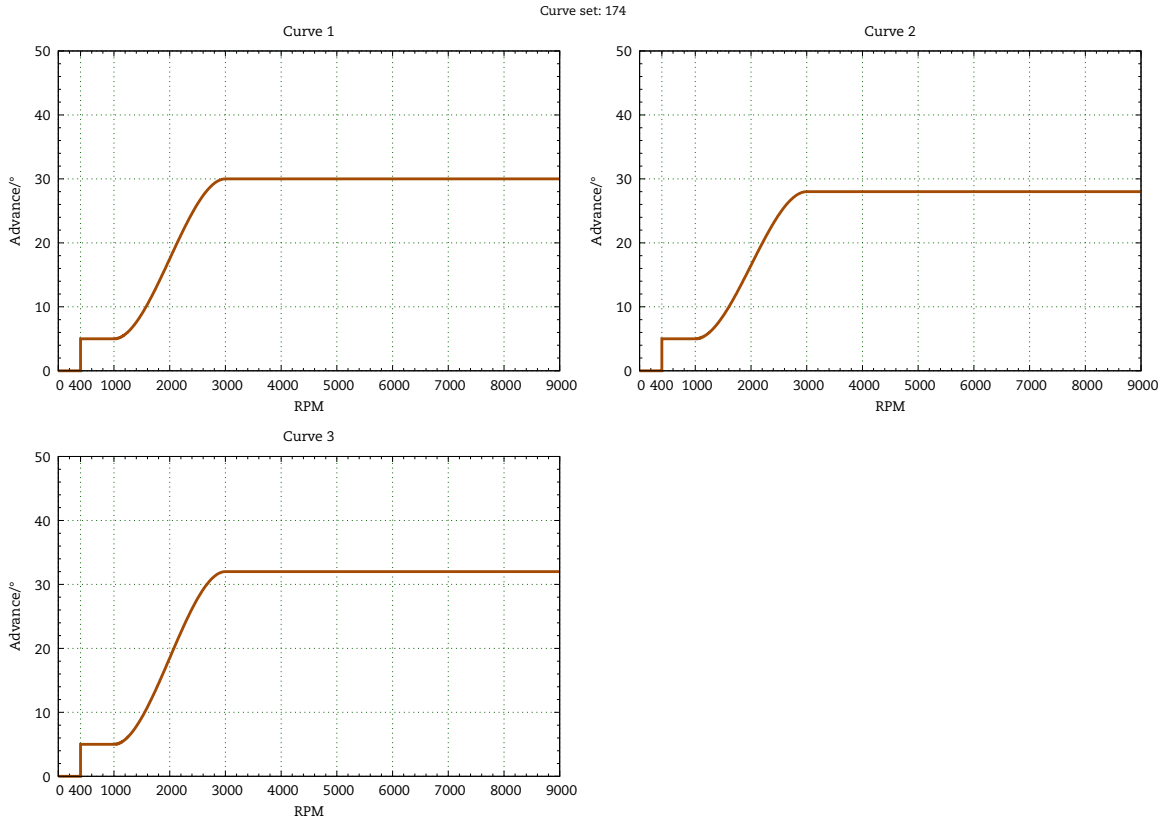

Figure 5 Selectable ignition curves.

We ship the units with a suitable curve for the purchased model as default. If you don't want to fiddle with the system, just leave it there. It is a conservative curve with not too aggressive advance so it does a good job as default curve for a variety of bike configurations. Otherwise if it's a stock bike, check the manual for advance setting the manufacturer recommends and select a suitable ignition curve based on that.

6 Troubleshooting

Test Mode

The ignition box features a *test mode*. This mode make the spark plug(s) fire continuously without the engine running. This tests the power supply, wiring, coils and the ignition box. However, it does *not* test the pickup. For a working ignition test mode has to *succeed*.

To use test mode, unscrew the spark plug(s) and place them back into the plug caps, so the spark can be observed. Then switch both DIP-switches OFF (=down). Then turn on the ignition. You should get a continuous spark. If that's not what's happening, check the voltage between ground (pin 2) and pin 6 if it reads 12 V. Sometimes it is required to turn the ignition off and on again to engage test mode.

Check Pickup

If test mode succeeds one can check the pickup. Select an ignition curve (any will do, except test mode). Unscrew the spark plug(s) and place them back into the plug caps, so the spark can be observed and turn on the ignition. Slowly crank the engine by hand and observe the LED on the pickup. It should turn ON and OFF if the magnets pass the sensor.

If the LED does not light up, check the voltage between terminal connection pin 3 and pin 5 while the ignition is turned on. It should read approximately 5 V.

If the LED constantly stays either on or off, regardless if the magnets pass the sensors, then it's likely that the pickup is damaged or the disk is misaligned to the sensor.

To check for misalignment you can unmount the pickup and magnet disk and reconnect the pickup to the ignition box. Then hold both in your hands and move the magnet ring towards the sensor. With the S magnet passing, the LED should go *on*, with the N magnet passing, the LED should go *off*. If that works, then the magnet disk is probably misaligned and doesn't pass the sensor while mounted in the bike.

The distance between magnet and sensor, depending on the exact model, should be around 0.5 mm – 2 mm. More important than the distance is the axial alignment (as just described).

Engine doesn't start or kicks back

If the engine would not start, or the engine kicks back, then the ignition timing is wrong. As a general rule: Each time when a piston reaches TDC the corresponding plug must generate a spark (at low rpms).

Unscrew the spark plug and turn on the ignition. Slowly crank the engine by hand and when a spark occurs, check if the piston is on TDC. It should be. If it's not, redo the initial setup according to chapter 5 on page 8.

Note that a spark is generated after the engine stops for 5 s. This spark can be ignored during this test.

Irregular Engine Cutouts

If sometimes the engine suspends while driving for 2–3 seconds and then keeps running normally, that means that the ignition has been reset. The cause for it can be a defective plug cap or a loose ignition cable in the coil or cap or a bad ground connection. But in most cases a bad contact in the operating voltage supply (kill switch, starter lock, fuse holder, terminals etc.) causes this effect. Sometimes one cylinder or the entire ignition ceases to work and a power cycle of the ignition is required to restore operation.

For a test you can connect a cable directly from the ignition coils and the ignition box to the positive terminal of the battery. Also put a second cable from the negative terminal of the battery to the ignition box (secure ground connection). If the engine is running well now you can assume an error in the wiring loom. With contact breakers such a bad contact is not noticeable, because a short break for a few milliseconds of the supply voltage doesn't matter, electronics in contrast are more sensitive to short power outages or surges.

One cause of irregular cutouts is a missing resistive component in the chain, see section "Spark Plugs / Spark Plug Caps" on page 6.

One or more Cylinders cut out when the Engine gets warm

This is likely an issue with the pickup. The pickup mounted by the engine gets warm and develops a bad contact resulting in a missing signal. If the problem is reproducible and cures itself when the engine is cooled down again, then the pickup should be changed. It is available as spare part (in case the warranty has expired).

Random Spark occurs

If sometimes a spark is generated when the piston is not at TDC, it might be that our energy saving mode kicks in. If the ignition detects no engine movement for five seconds, it stops the current to the coil to prevent it from overheating as well as saving energy. This generates a spark. It's a feature of the system to improve reliability and not a fault.

LED on the Pickup does not completely turn off

It is not a fault if the LED on the pickup does not completely turn off. Sometimes it is still slightly glowing. The important part is that it has two clearly distinguishable states: *On* and *off* or *on* and "almost off". This doesn't affect operation in any way.

Elektronik Sachse MHP GmbH & Co. KG
Busestraße 26a
28213 Bremen
Germany
☎ +49 (0) 54 09 90 69 82 6
✉ info@elektronik-sachse.de
⌨ www.elektronik-sachse.de